PRODUCT SHEET

Description:
Combi. Cam Lock "Dome", 90DG, ø19x17.5mm, CPL, Straight Cam Centre To Edge 38mm, Universal - Left & Right in one Lock

Item number:
14.08.200-0

Units	Box	Carton	HS Code	Barcode
Pcs.	20	100	8301300000	5704866045278

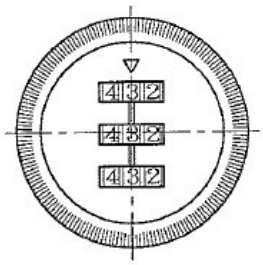

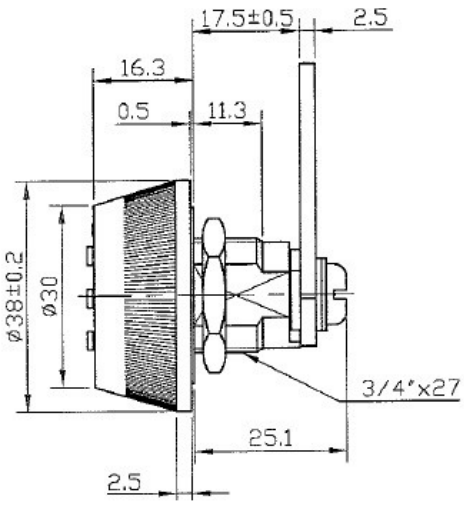

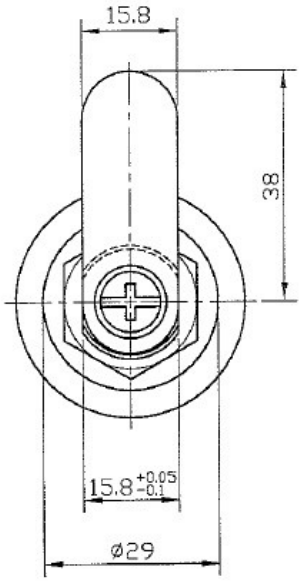

SISO A/S
Mileparken 11
DK-2740 Skovlunde
Denmark
VAT: DK 24786013

Phone +45 45 830 900

www.siso.dk
siso@siso.dk

Danske Bank
Nytorv Branch
Copenhagen
SWIFT: DABADKKK

Account no.
4180 3112 112936
IBAN Account
DK7230003112112936